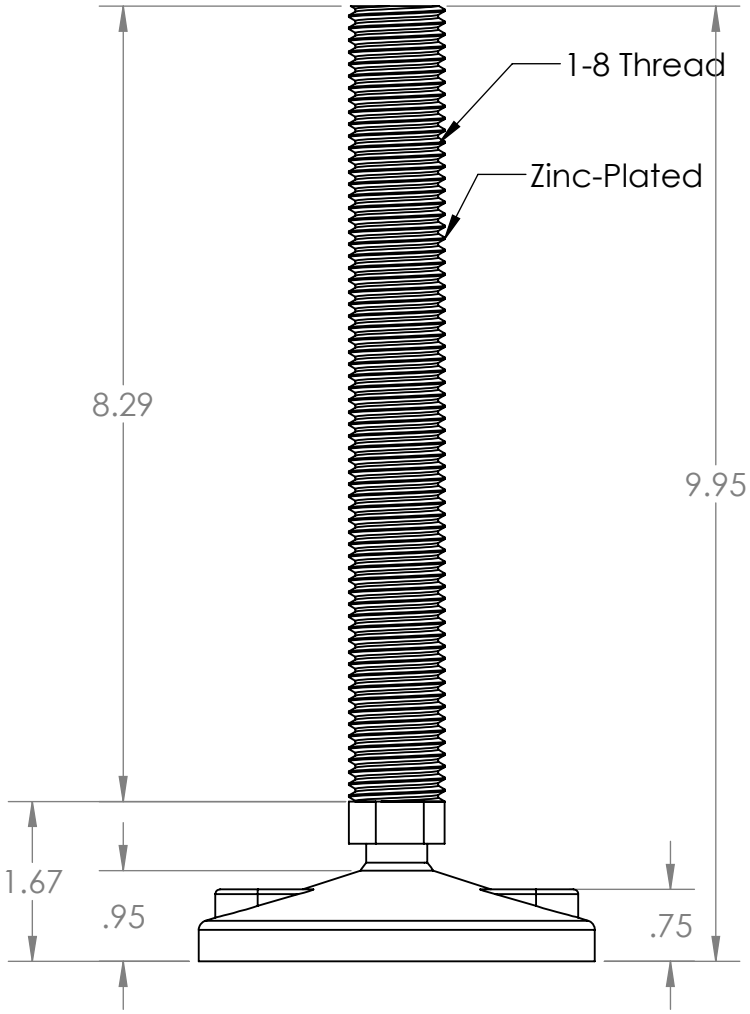

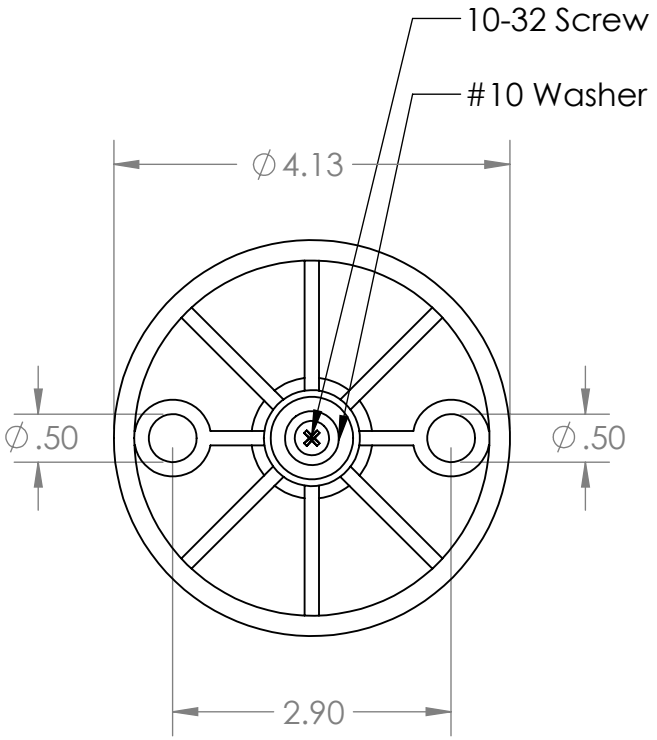

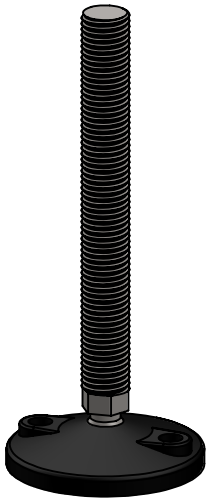

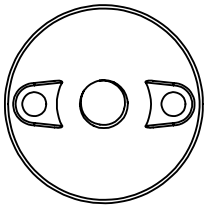

		UNLESS OTHERWISE SPECIFIED:		NAME	DATE
		DIMENSIONS ARE IN INCHES TOLERANCES: ±0.01	DRAWN	Charles Kirk	11/5/18
			CHECKED		
			ENG APPR.		
			MFG APPR.		
		INTERPRET GEOMETRIC TOLERANCING PER:	Q.A.		
		MATERIAL	COMMENTS:		
NEXT ASSY	USED ON	FINISH			
APPLICATION		DO NOT SCALE DRAWING			

TITLE:
4" Level-LockLeveler with Hex Metal Ball
1-8 Threaded Rod for 9.95" Length

SIZE	DWG. NO.	REV
A	MPS2HL70410100PL	
SCALE: 1:4	WEIGHT:	SHEET 1 OF 1

PROPRIETARY AND CONFIDENTIAL

THE INFORMATION CONTAINED IN THIS DRAWING IS THE SOLE PROPERTY OF MASON PLASTICS COMPANY. ANY REPRODUCTION IN PART OR AS A WHOLE WITHOUT THE WRITTEN PERMISSION OF MASON PLASTICS COMPANY IS PROHIBITED.